Sceptre Solarus 100S

SCEPTRE
SOLARUS
100S

sentura II schematic

effective: June 1,1967

Sunn Musical Equipment Company
amburn industrial park
tualatin, oregon 97062
tel. 503/638-4115
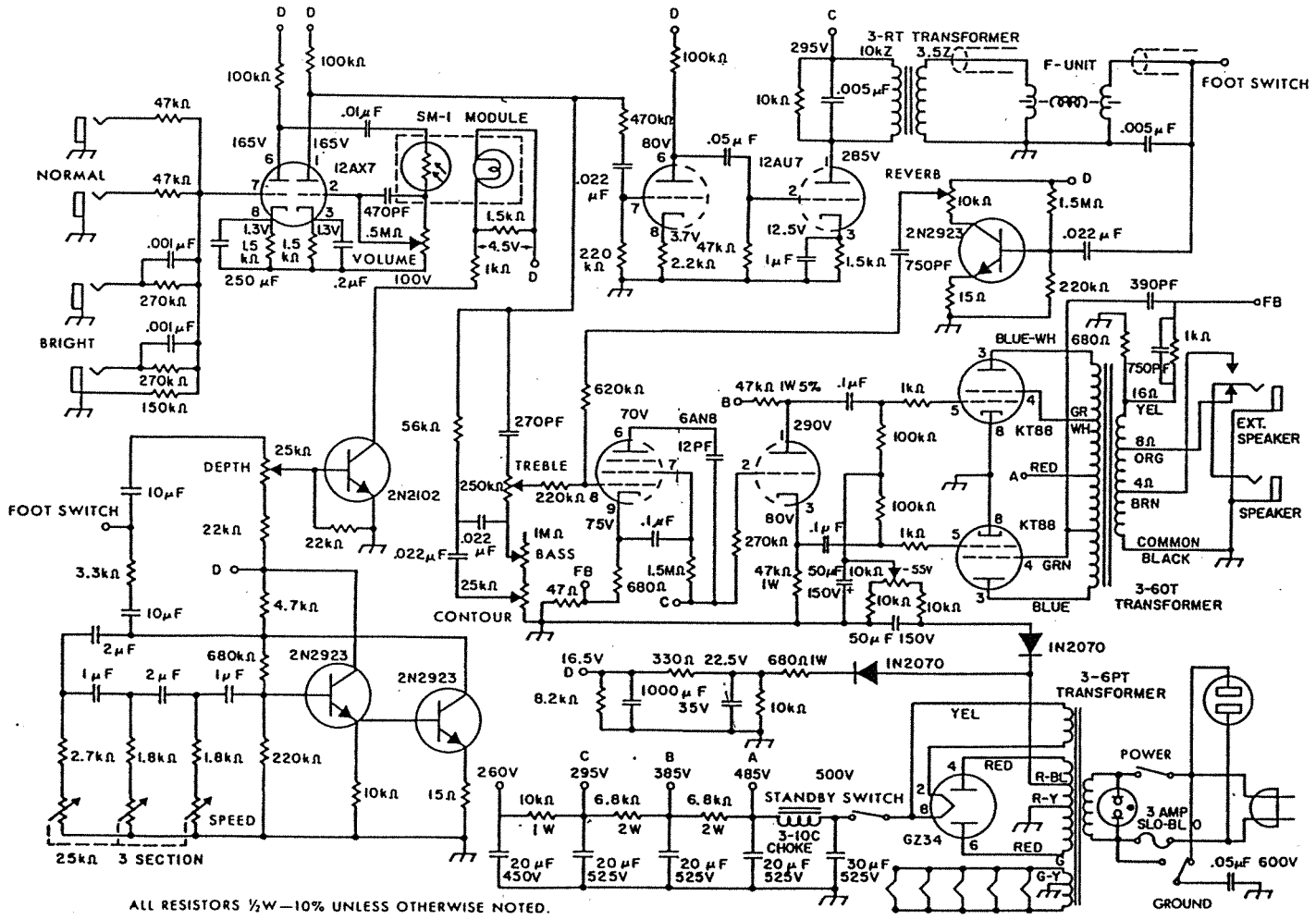
sunn